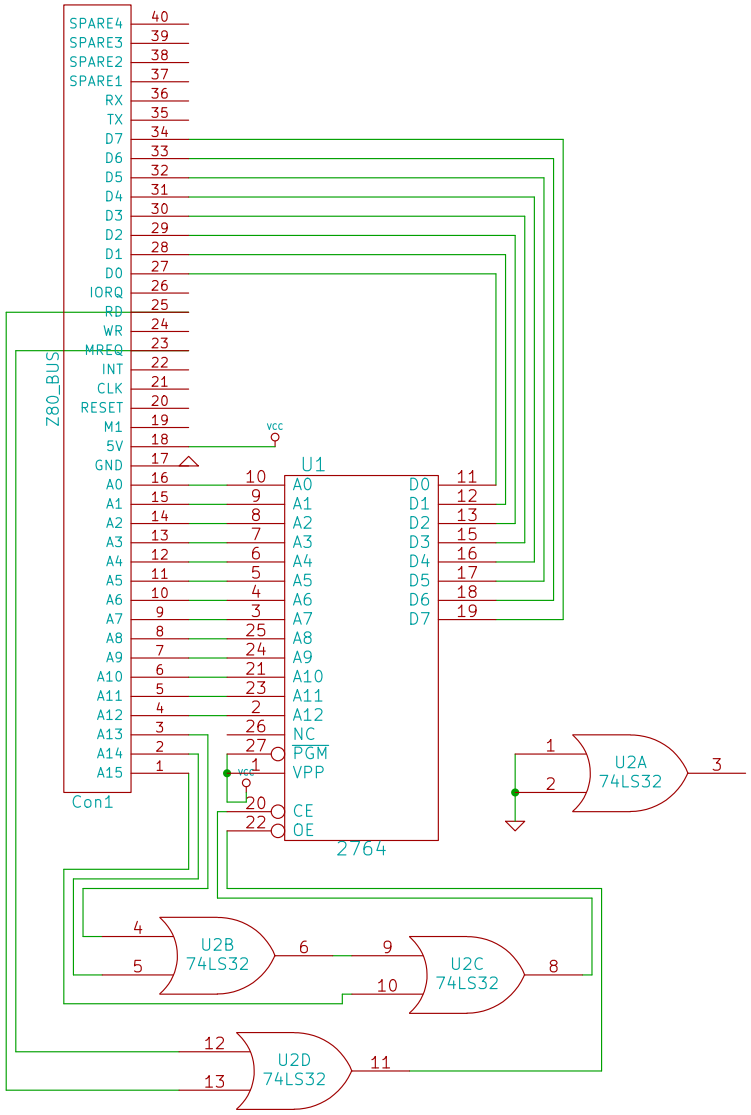

File: Z80 Retro Challenge 2 ROM basic.sch		
Sheet: /		
Title:		
Size: A4	Date: 3 jul 2014	Rev:
KiCad E.D.A.		Id: 1/1